MOEN

Buy it for looks. Buy it for life.®

Specifications

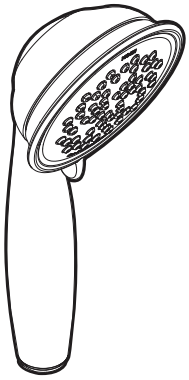

ENVI®
Eco-Performance Hand Shower

Models: 147913 series

DESCRIPTION
- Metal construction with various finishes identified by suffix

OPERATION
- Three spray patterns – massage, full, and combination

FLOW
- Limited to 1.75 gpm (6.6 L/min) max.

STANDARDS
- Designed and manufactured to comply with the applicable requirements of ASME A112.18.1/CSA B-125.1, ASSE 1014 and all applicable specifications referenced therein

WARRANTY
- Lifetime limited warranty against leaks, drips and finish defects to the original consumer purchaser
- 5 year warranty if used in commercial installations

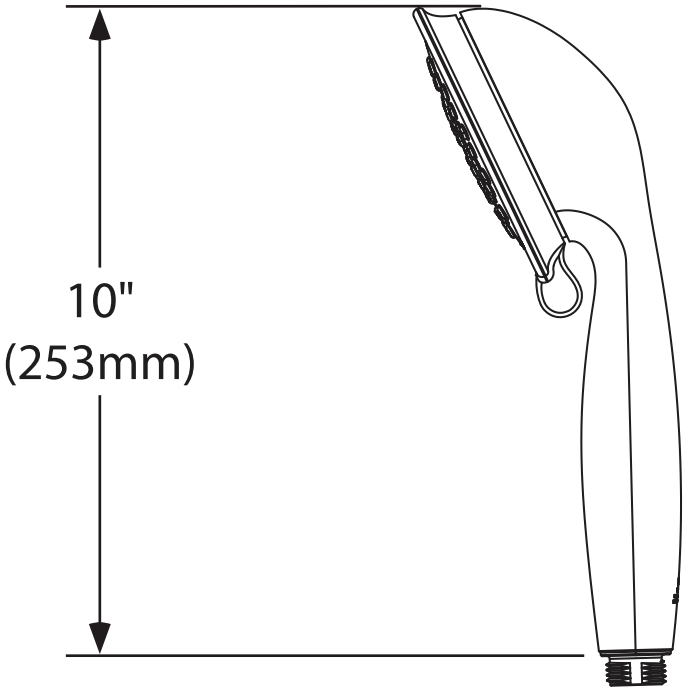

CRITICAL DIMENSIONS

(DO NOT SCALE)

FOR MORE INFORMATION: 1-800-BUY-MOEN
www.moen.com

07124DTK SPC5329 500000H595
Released 00