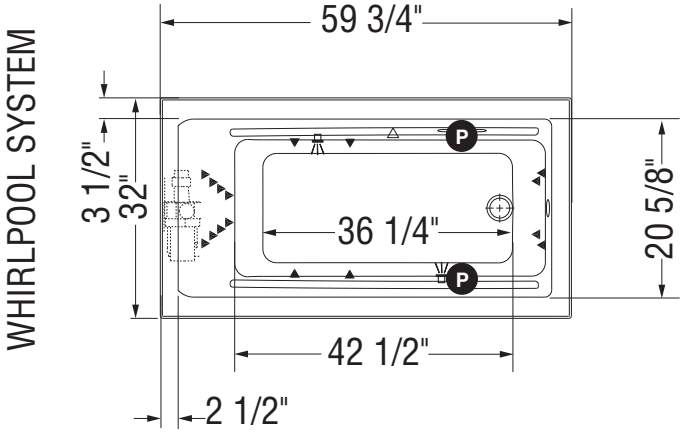


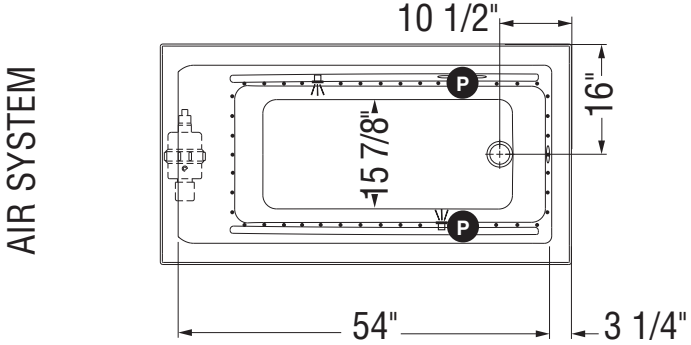


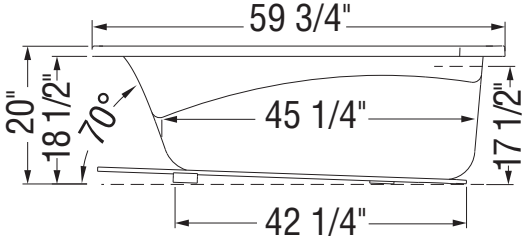


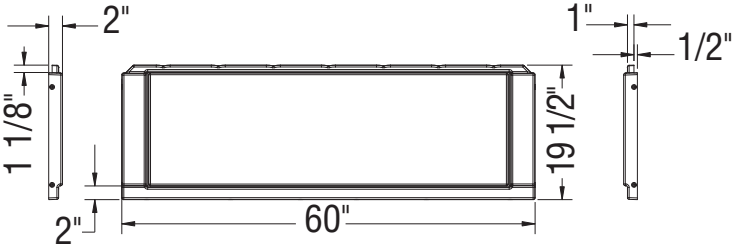


( Ⓟ ) : Indicates optional grab bar positioning
( ▲ ) : Indicates whirlpool jets positioning
( △ ) : Indicates suction positioning
( • ) : Indicates airjets positioning
( ) : Indicates chromatherapy light positioning

Bathtub base includes anti-vibration Neutra-Phone leg supports (not shown).

**All dimensions are approximate. Structure measurements must be verified against the unit to ensure proper fit.**