TOWSON TWO HANDLE KITCHEN FAUCET / 18" SPOUT / W SIDE SPRAY

8010-18-1

- MAX COUNTER THICKNESS 2-3/8"
- MINIMUM INSTALL HOLE SIZE 1-1/2"

A. Side Spray Connection with 1/4" NPT Pipe Fitting

B. Supply Hoses - 20" Long with 3/8" Compression Fittings

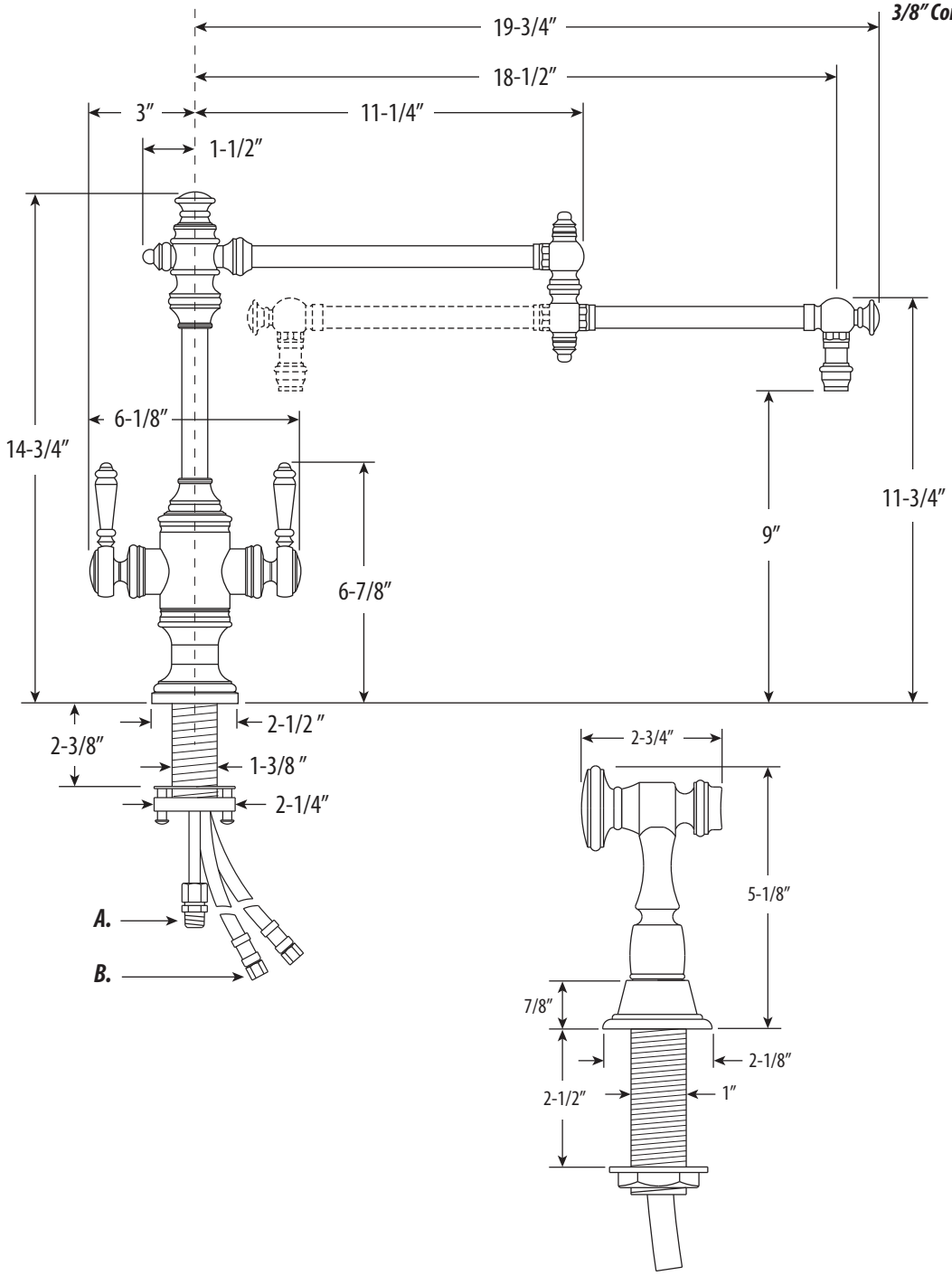

DIMENSIONS MAY VARY AND ARE SUBJECT TO CHANGE. NO RESPONSIBILITY IS ASSUMED FOR USE OF SUPERCEDED OR VOIDED DATA

41180 Raintree Court • Murrieta, CA 92562 • 1-888-304-0660 • Fax 951-304-0525 • www.waterstoneco.com

REVISED: 7-13-22